ZDWK-12

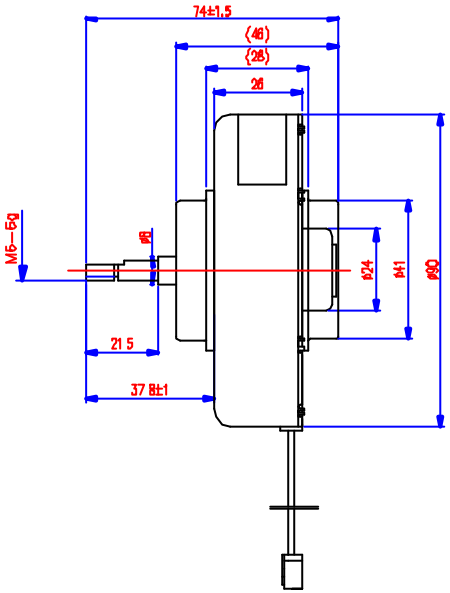

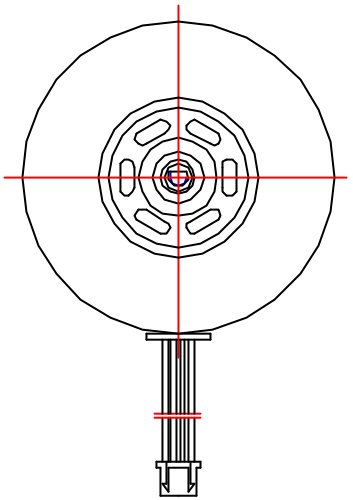

Motor Model	Speed at Max Efficency (rpm)	Max-Operating Voltage (V)	Current at Max Efficiency (A)	Max Tourque (N.m)	Use
ZDWK-12	685	35	0.45	0.15	A/C motor